APP. TYPE	QTY
LX-300SG	1

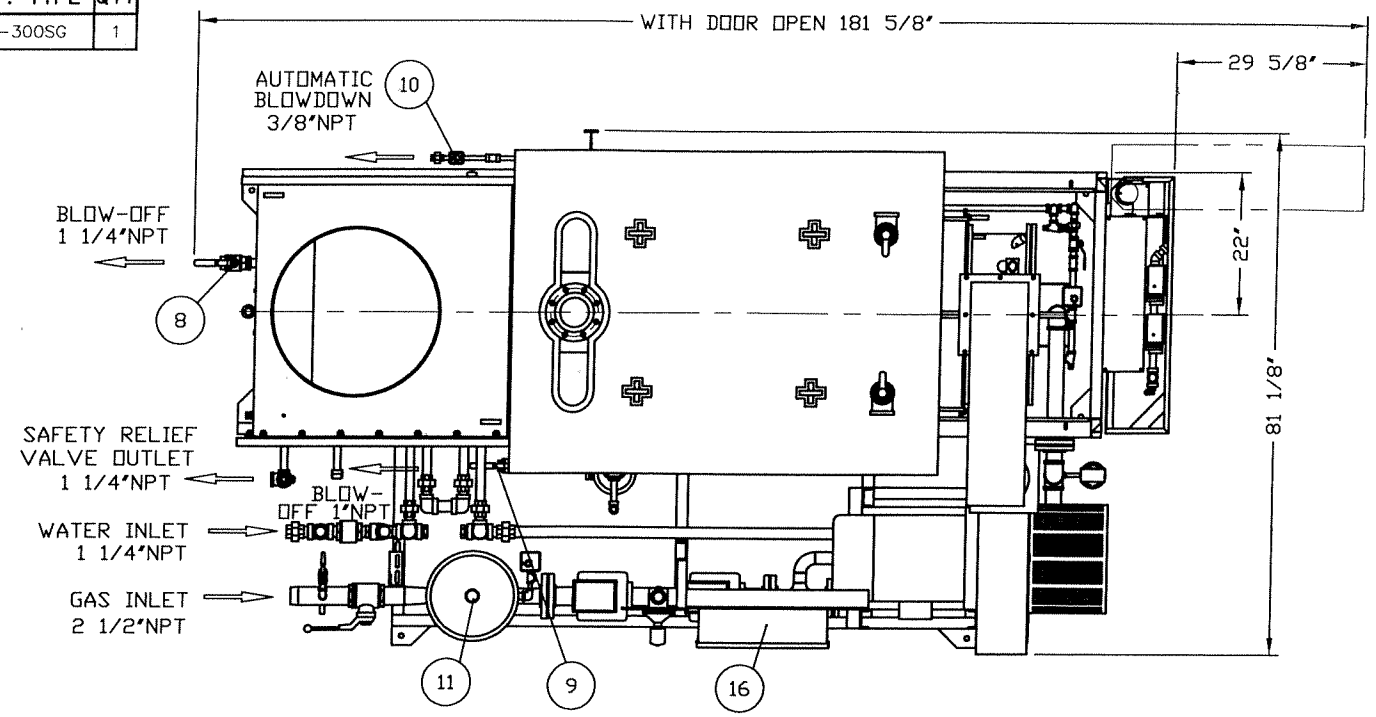

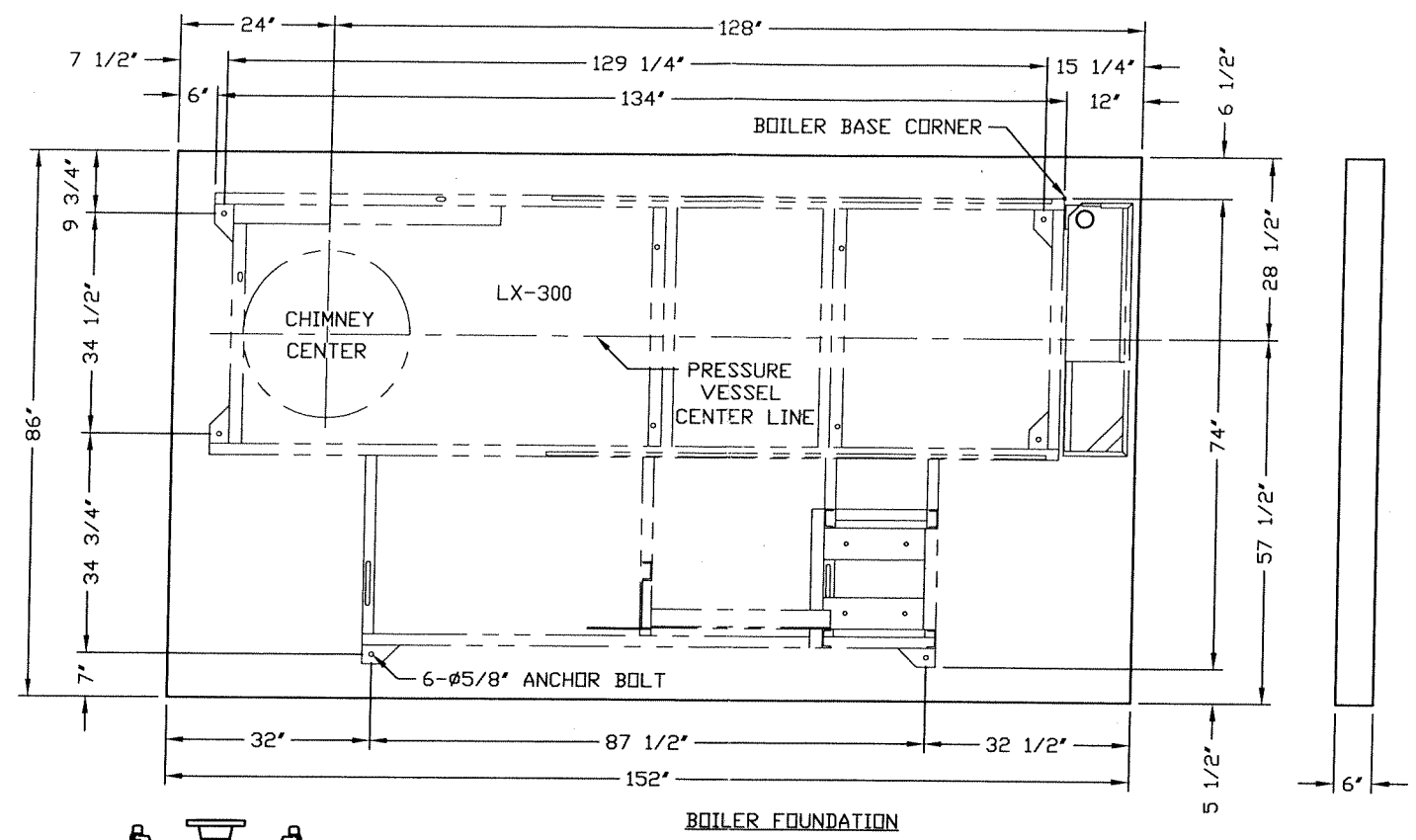

BOILER FOUNDATION

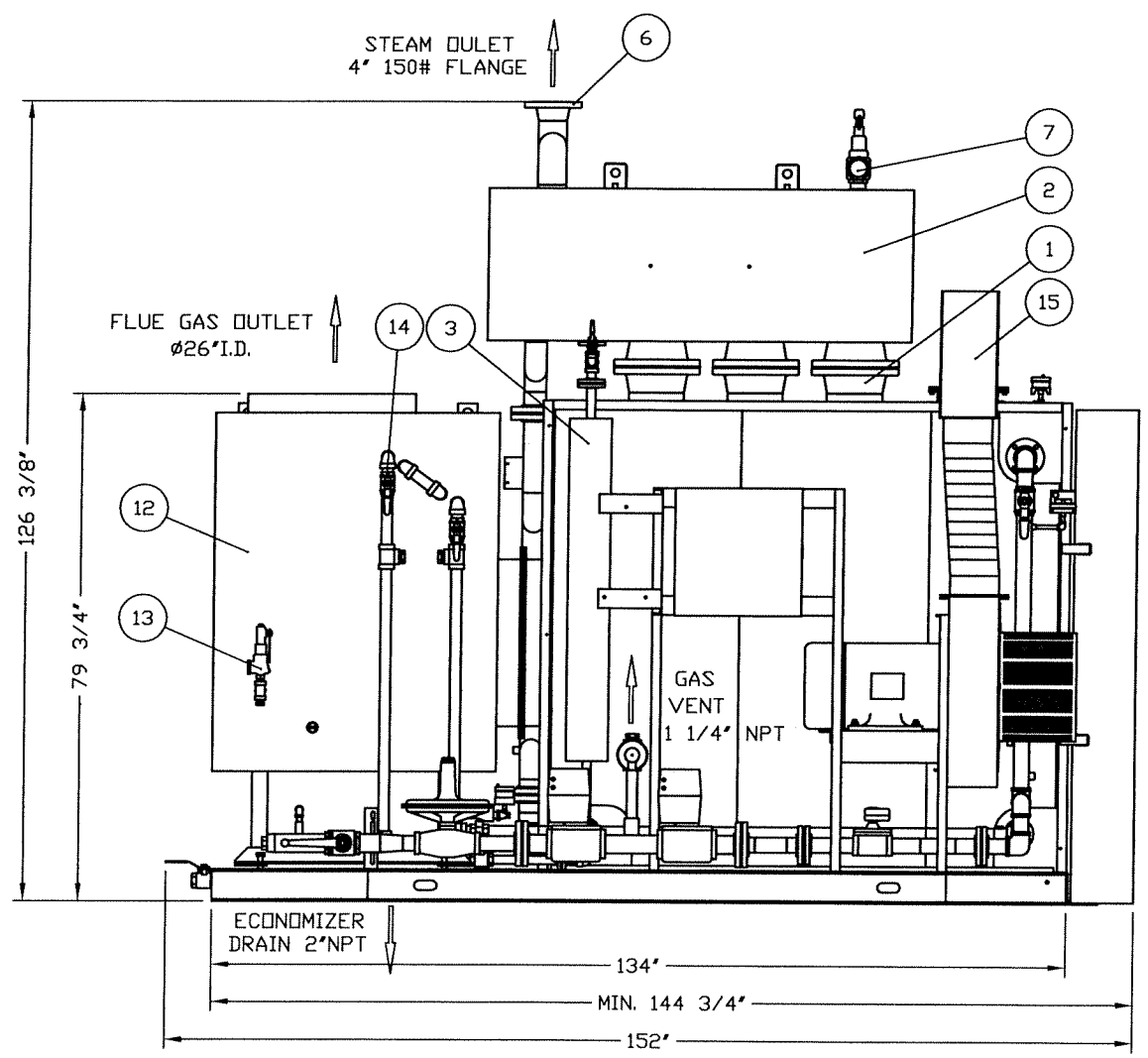

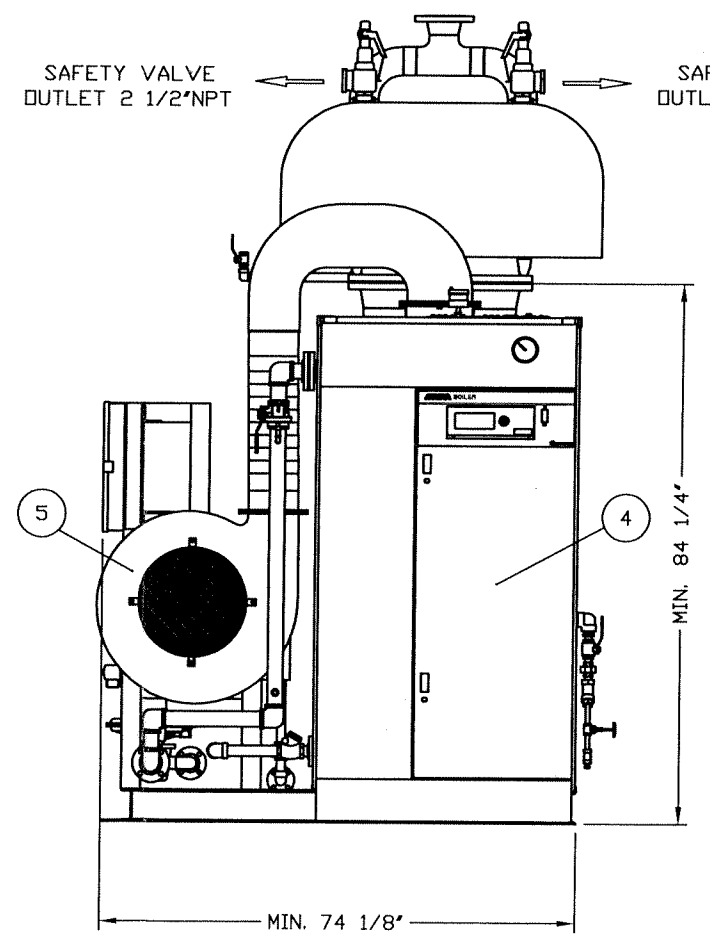

FOR REFERENCE

NOTE:

1) DIMENSIONS, SPECIFICATIONS AND SOME PIPINGS ARE SUBJECT TO CHANGE WITHOUT NOTICE.
2) MINIMUM DIMENSIONS AS SHOW, DO NOT INCLUDE ITEM 2, 5 - 8, 10, 12 & 15.
3) ECONOMIZER SAFETY VALVE IS APPLIED FOR CANADA BOILER ONLY.

NO.	NAME OF PART	MATERIAL	QTY	REMARKS / DRAWING #
16	POWER BOX		1	
15	AIR DUCT		1	
14	FEEDWATER PIPING		1	1 1/4"
13	ECONOMIZER SAFETY VALVE		1	3/4" x E x 1 1/4"
12	ECONOMIZER		1	ø26" I.D.
11	MAIN GAS TRAIN		1	2 1/2"
10	AUTOMATIC BLOWDOWN		1	3/8"
9	MANUAL BLOW-OFF		1	1"
8	MANUAL BLOW-OFF		1	1 1/4"
7	MAIN SAFETY VALVE		2	2" x J x 2 1/2"
6	STEAM OUTLET FLANGE		1	4"
5	BLOWER		1	
4	CONTROL BOX		1	
3	LIQUID VOLUME CONTROLLER		1	
2	STEAM SEPARATOR		1	
1	BOILER VESSEL		1	

" CONFIDENTIAL "
THIS MATERIAL IS THE PROPERTY OF MIURA BOILER CO., LTD., AND MUST NOT BE REPRODUCED, PUBLISHED OR DISCLOSED TO OTHERS WITHOUT AUTHORIZATION.

SYM	REVISION	DATE	BY
	CAD DWG - NO MANUAL CHANGES PERMITTED		

DWN.: TRAM | CK'D.: | SCALE: NON | DO NOT SCALE

DATE: NOV.25,2002 | APPROVED: | THIRD ANGLE SYSTEM | DIM'N SHOWN ARE INCH

MIURA BOILER CO., LTD. BRANTFORD, ONTARIO, CANADA

DESCRIPTION: BOILER ASS'Y OUTSIDE VIEW

DRAWING NUMBER A000-LX30-0W11